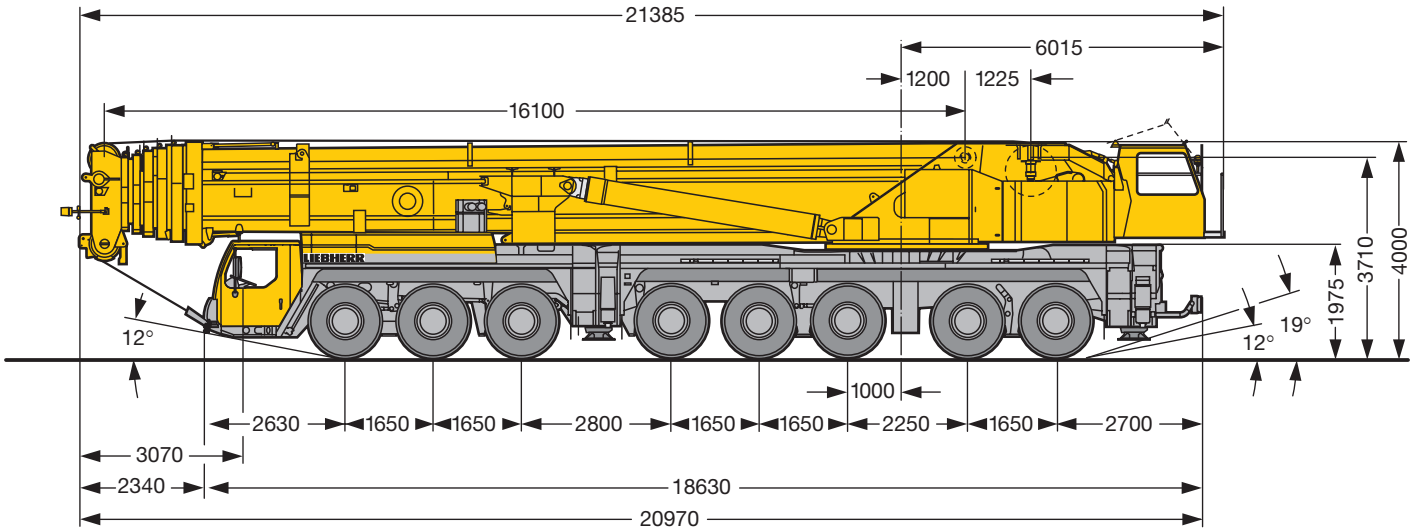
21385
6015
1200
1225
16100
LIEBHERR
12°
19°
12°
1975
3710
4000
1000
2630
1650
1650
2800
1650
1650
2250
1650
2700
3070
2340
18630
20970

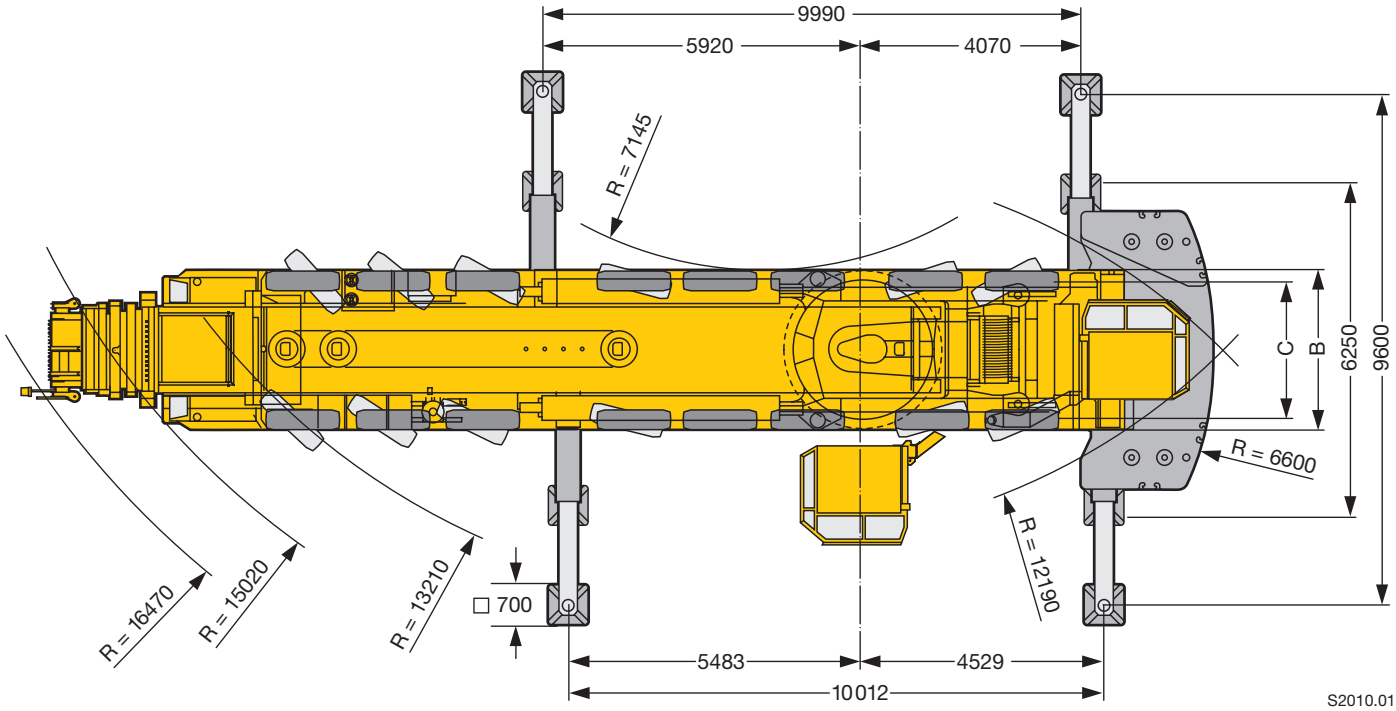
9990
5920
4070
R = 7145
C
B
6250
9600
R = 6600
R = 12190
R = 16470
R = 15020
R = 13210
□ 700
5483
4529
10012

S2010.01